ASSEMBLY INSTRUCTION
BOGOTA 2 DRAWER KING BED
ITEM CODE - 80789

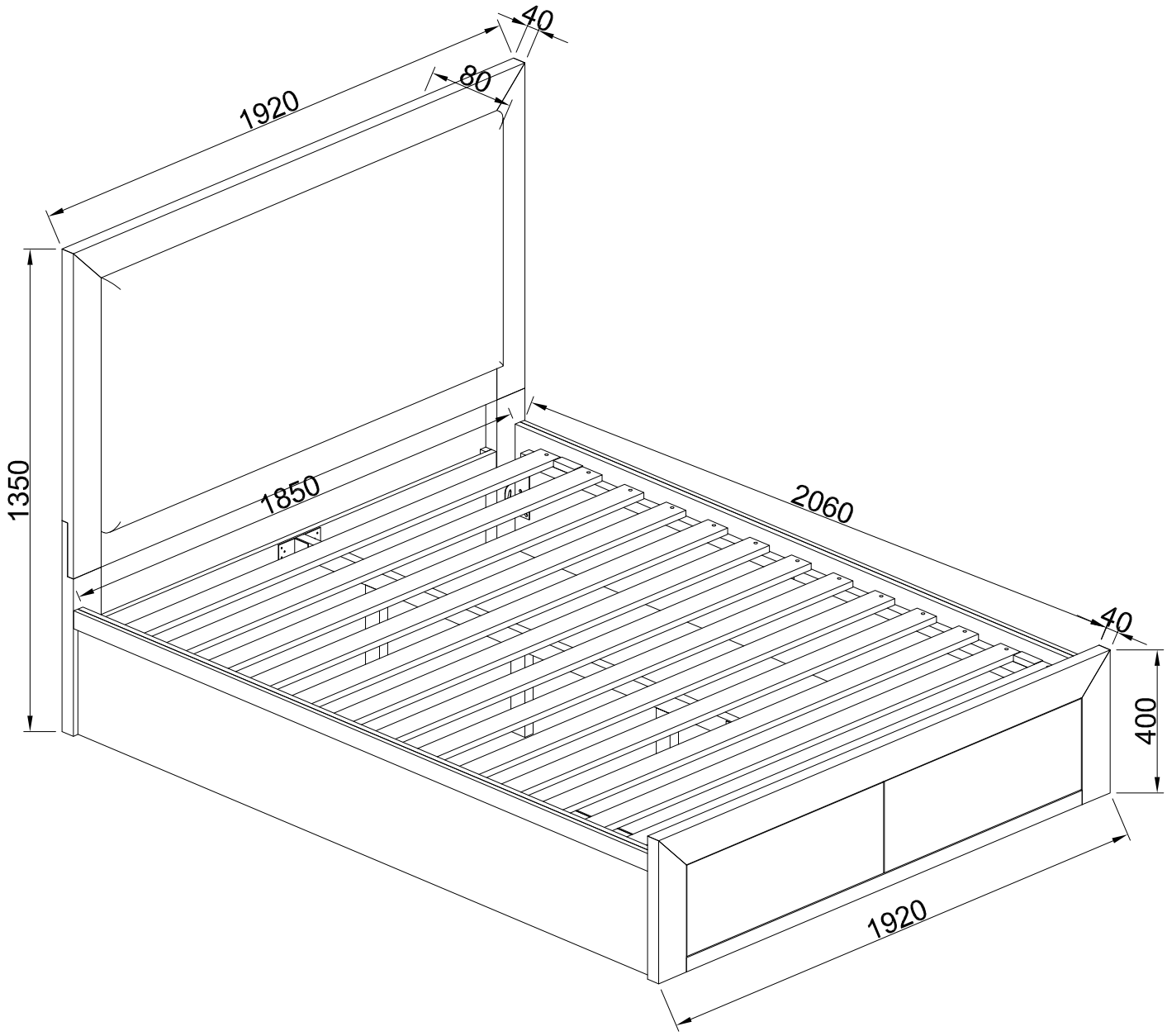

Imported by Amart Furniture Pty Ltd, Qld, Brisbane Australia.
for any assistance to assembly or for missing parts please phone
Amart Furniture, Customer Service Freecall 1800 351 084

PRE-ASSEMBLY PREPARATION

BEFORE YOU START :

1. Choose a clean, level, spacious assembly area. Avoid hard surfaces that may damage the product
2. Take care when lifting. Product should be assembled as near as possible to the point of use
3. Ensure that you have all required contents for complete assembly
4. Always read the assembly instructions carefully before beginning assembly.
5. Keep all hardware parts and packaging out of reach of small children.
6. Do not over tighten the screws and bolts as this may damage the threads

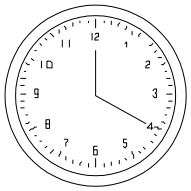	
ALLOW 20 MINUTES	2 PEOPLE REQUIRED
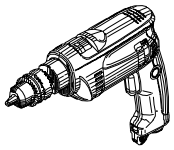 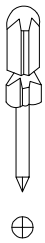 We recommend using screw driver to put this item together. However if you choose to use a power drill it must be used on LOW SPEED (LOW TORQUE) as too much pressure could damage the product.	
ADDITIONAL TOOLS REQUIRED	

PARTS LIST

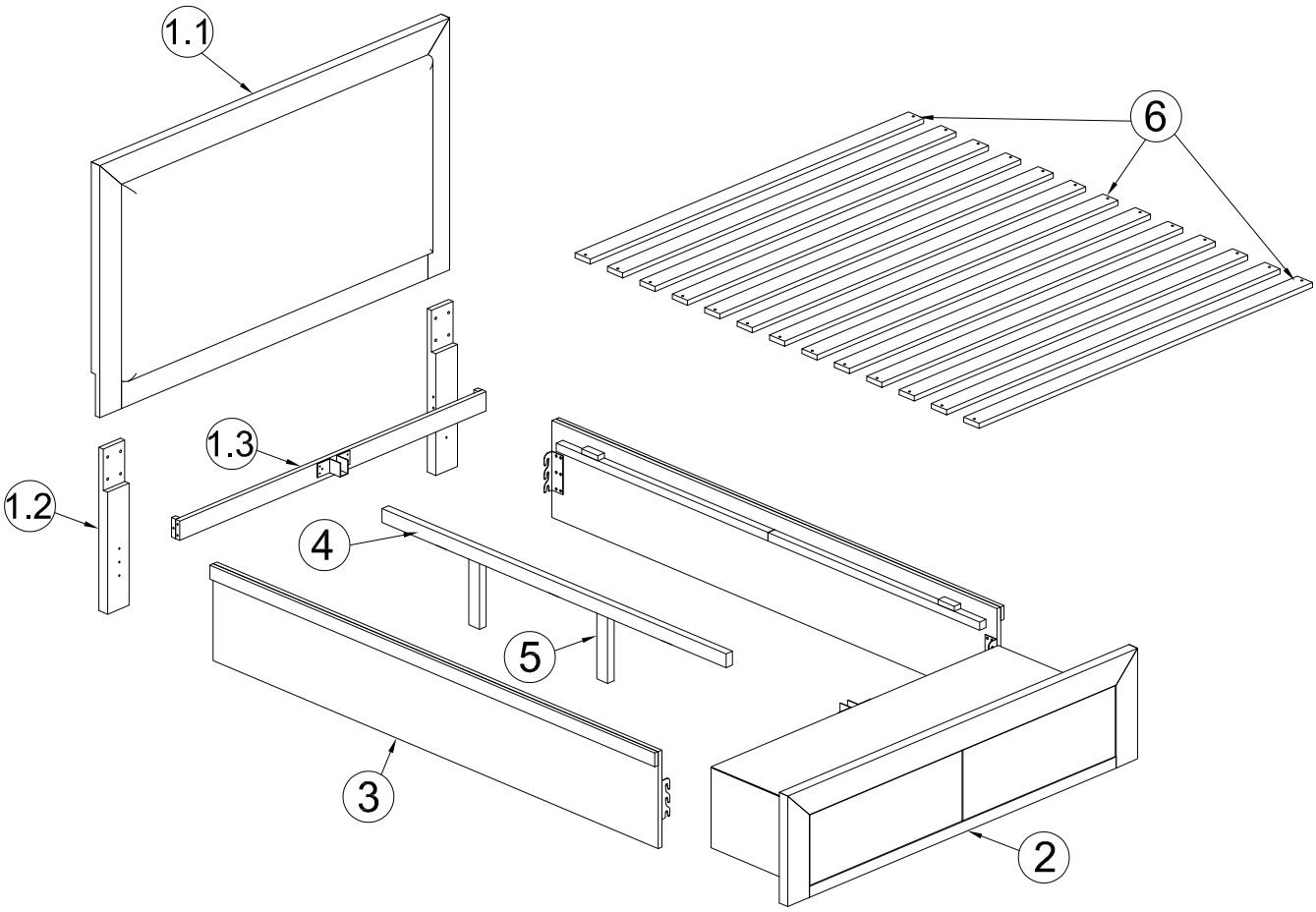

1	HEADBOARD	1 PC	2	STORAGE FOOTBOARD	1 PC
	1.1 HEADBOARD PANEL	1 PC	3	SIDE RAILS	2 PCS
	1.2 HEADBOARD LEGS	2 PCS	4	CENTER SUPPORT RAIL	1 PC
	1.3 STRETCHER	1 PC	5	SUPPORT LEGS	2 PCS
			6	SLATS	13 PCS

A BOLTS	B BOLTS	C BOLTS	D SPRING WASHER	E FLAT WASHER	G SPRING WASHER	H FLAT WASHER
M6x35: 2 pcs	M6x50: 10 pcs	M8x30: 12 pcs	M6x1.2x13: 10 pcs	M6x2x19: 10 pcs	M8x1.2x13: 12 pcs	M8x2x19: 12 pcs
I DOWEL	K SCREWS	L ALLEN KEY				
M8x30: 8 pcs	M4x30: 26 pcs	M4x59: 1 pc				

Step 1 :

- Attach the Headboard Legs (1.2) to the Stretcher (1.3). Using Bolts (B), Spring Washer (D), Flat Washer (E), Dowel (I) and tighten with Allen Key (L).
- Attach the Headboard Panel (1.1) and Headboard Legs (1.2). Using Bolts (A), Spring Washer (D), Flat Washer (E) and tighten with Allen Key (L).

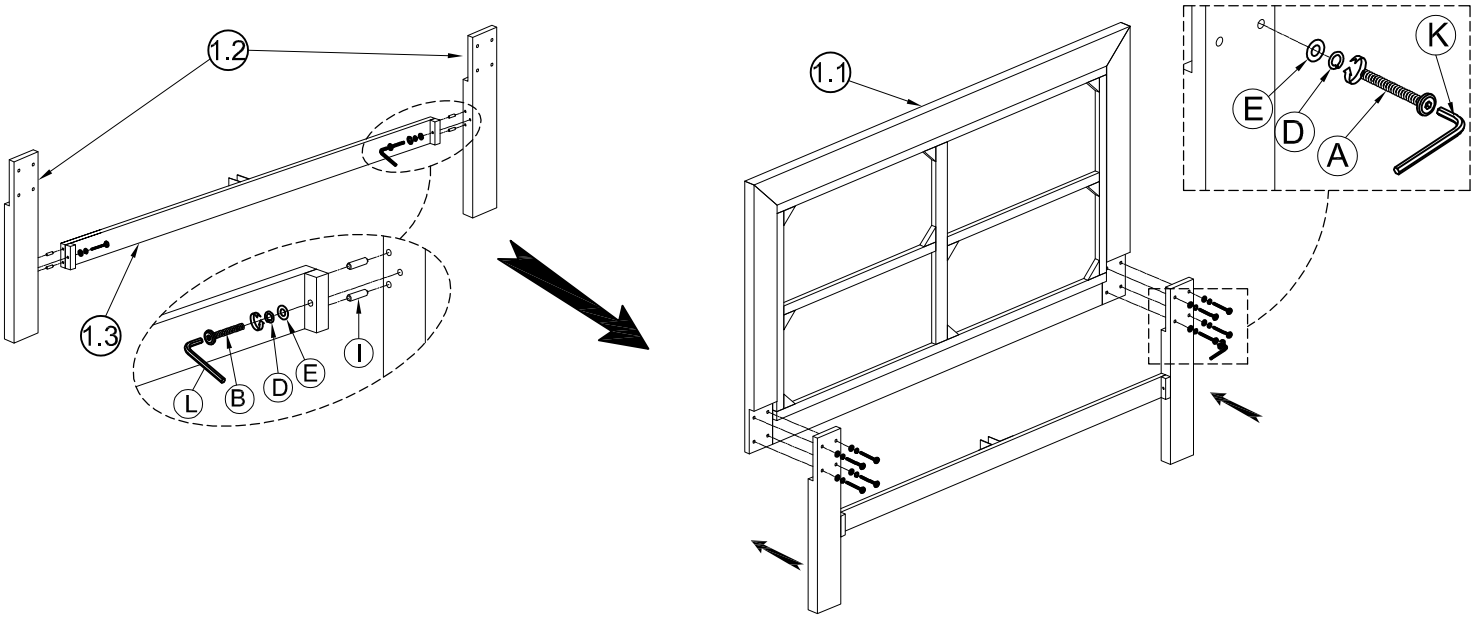

A BOLTS	B BOLTS	D SPRING WASHER	E FLAT WASHER	I DOWEL	L ALLEN KEY
M6x35: 8 pcs	M6x50: 2 pcs	M6x1.2x13: 10 pcs	M6x2x19: 10 pcs	M8x30: 4 pcs	M4x59: 1 pc

Step 2 :

- Attach the Side Rails (3) to the Headboard (1) and Footboard (2). Using Bolts (C), Spring Washer (G), Flat Washer (H) and tighten with Allen Key (L).

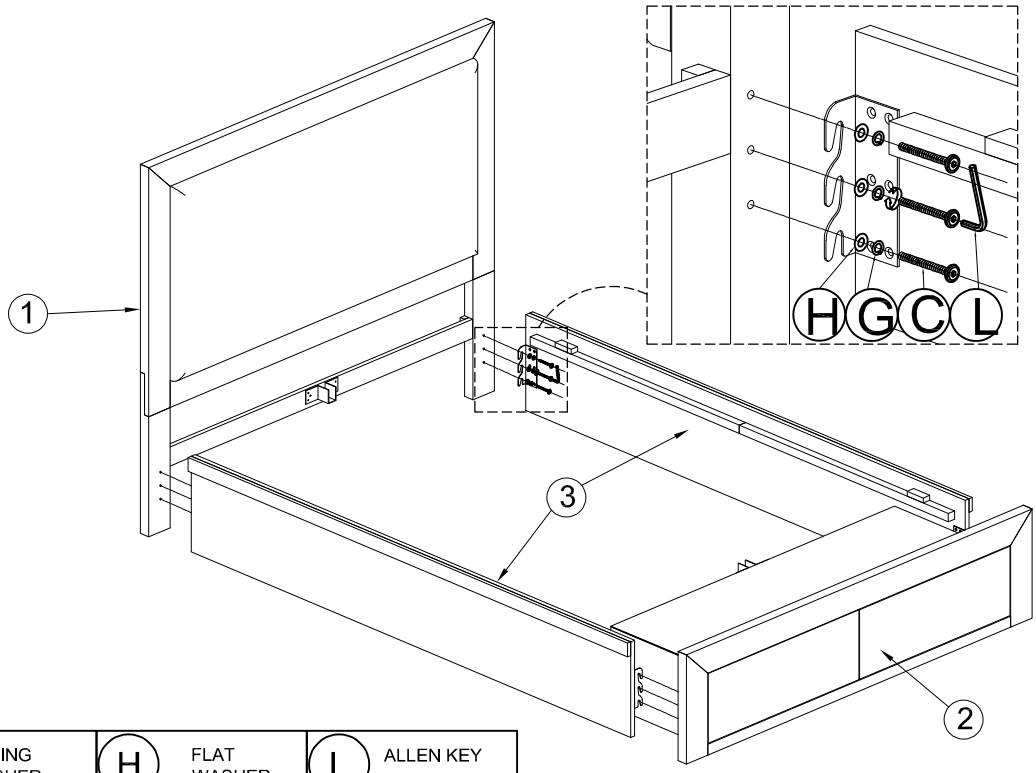

C BOLTS	G SPRING WASHER	H FLAT WASHER	L ALLEN KEY
M8x30: 12 pcs	M8x1.2x13: 12 pcs	M8x2x19: 12 pcs	M4x59: 1 pc

Step 3 :

- Attach the support legs (5) to the center rail (4). Using Bolts (B), Dowel (I) and tighten Allen Key (L).
- Insert the Center Support Rail to "U" Metal Bracket which attached on Headboard (1) and Footboard (2).

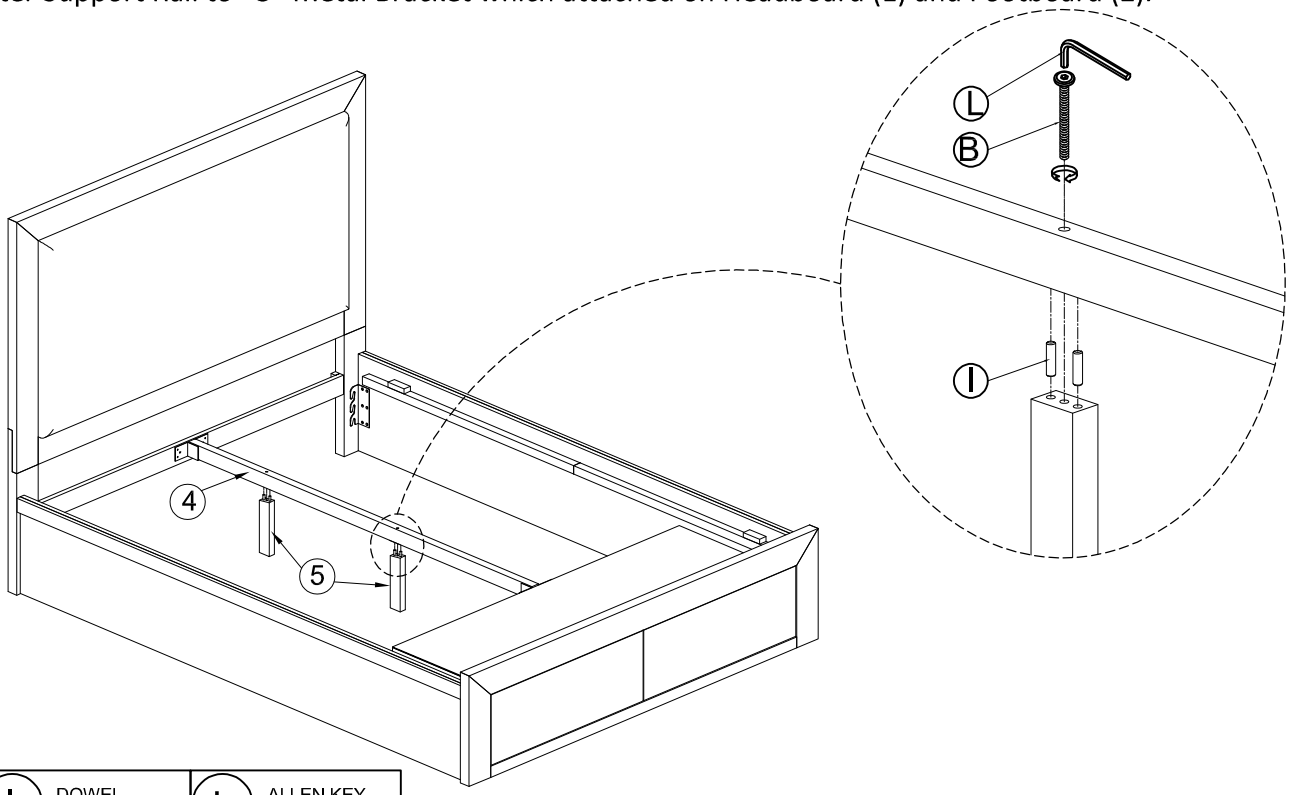

B BOLTS	I DOWEL	L ALLEN KEY
M6x50: 2 pcs	M8x30: 4 pcs	M4x59: 1 pc

Step 4 :

- Using Flat Head Screw (K) and tighten with Screwdriver to fasten Slats (6), Side Rails (3) and Center Support Rail (4) together.

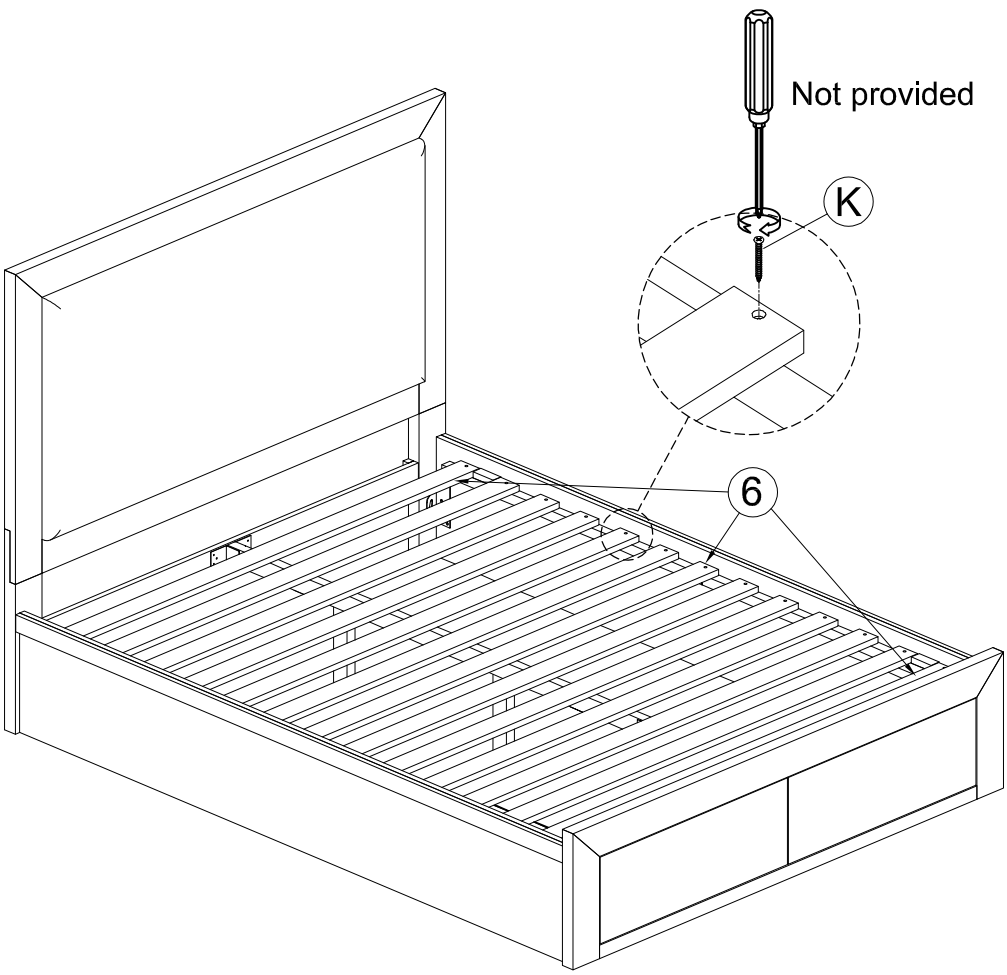

K SCREWS

M4x30: 26 pcs

ASSEMBLY COMPLETE

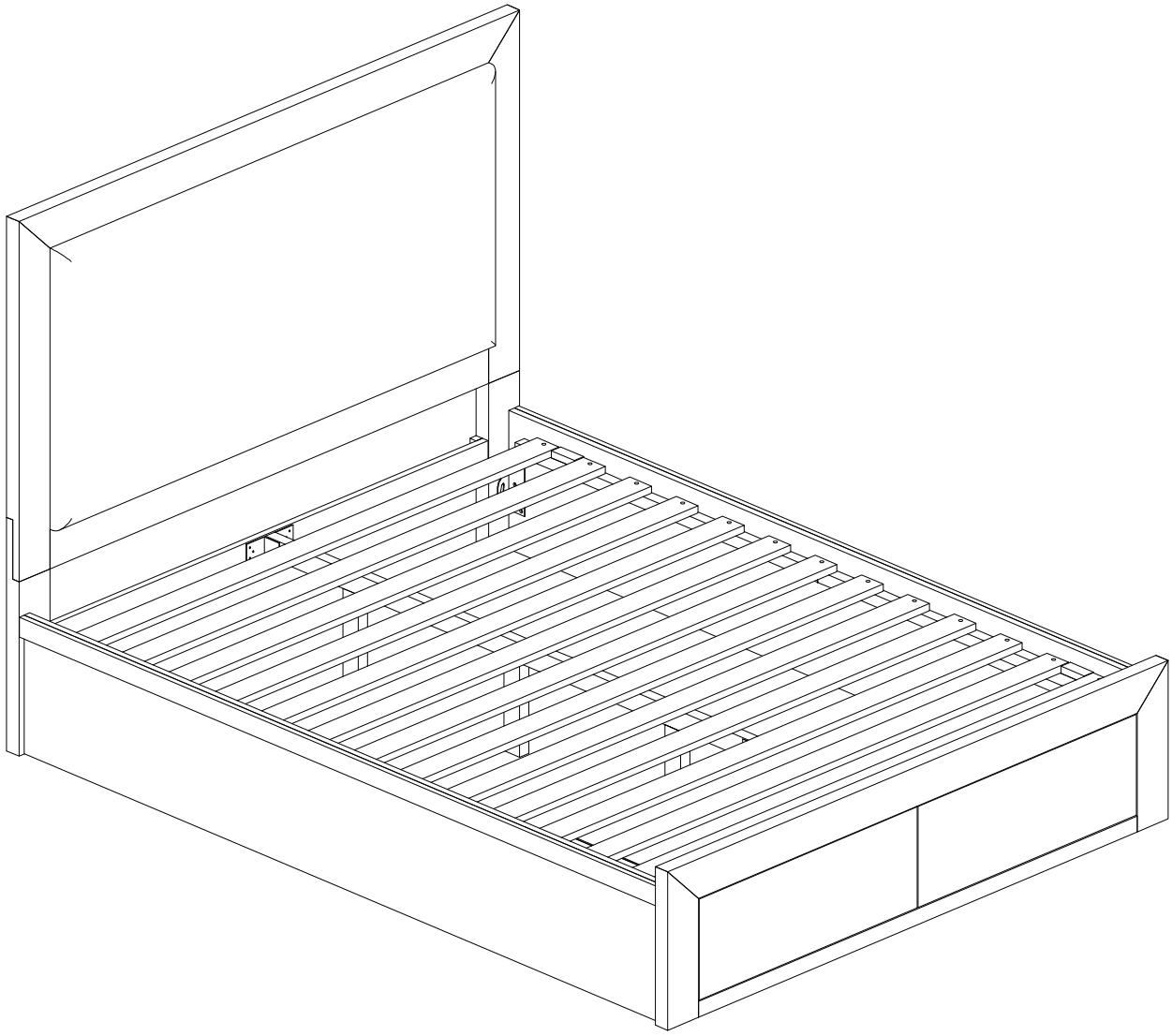

DO NOT PUSH OR DRAG THIS FURNITURE – IT WILL CAUSE DAMAGE TO THE LEGS

Product : **BOGOTA 2 DRAWER KING BED**

Item Code : **80789**

Product Care:

As you timber is supplied from sustainable forests there will be natural variations in surface texture and grain like knots, mineral streaks and sap runs that may affect the finish.These differences in character are not defects, but distinctions that make each piece of furniture unique. Our furniture is built to last. Following these steps for basic care should protect your investment for years to come.

- Dust frequently with a clean damp lint-free cloth. This will help remove abrasive build up which can damage a finish over time.
- Do not place hot obiects on any furniture surface. Always use a hot plate or placemat. Laminate and lacquer finishes on table tops provide added scratch and heat resistance to our furniture, but they can still be damaged without proper care.
- Avoid exposing your furniture to strong sunlight, heat outlet, open windows or dampness. Prolonged exposure to direct sunlight can fade the finish of your furniture, while extreme temperature and humidity changes can cause cracking or splitting.
- Do not expose your furniture to any liquids. Never allow water to sit on your furniture. Alcohol, nail polish and perfume are also dangerous as they will dissolve the lacquer finish on contact and may require professional repairs.
- Do not allow plastic to come in direct contact with your furniture. Chemicals in the plastic of placemats etc may soften and mark the finish if left in contact with the furniture for a period of time.